配线图

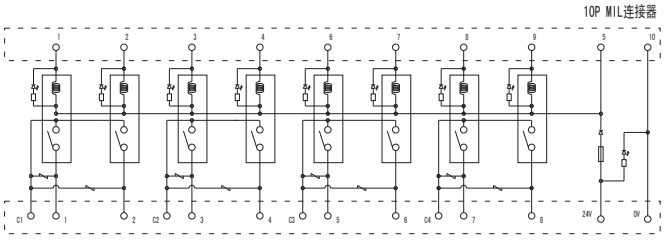

ARP008N-1

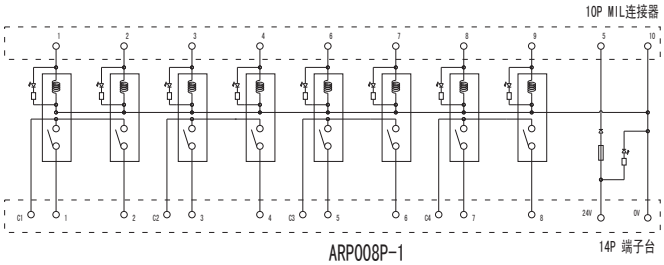

ARP008P-1

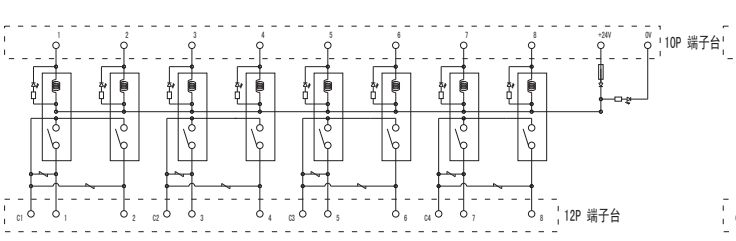

ARP008N-3

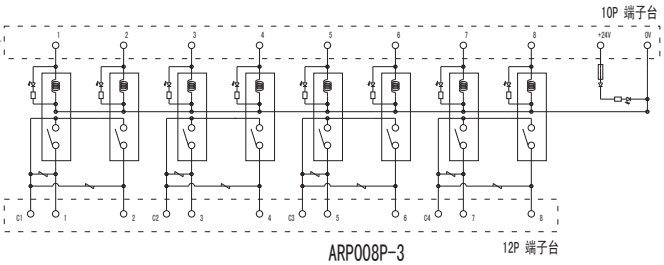

ARP008P-3

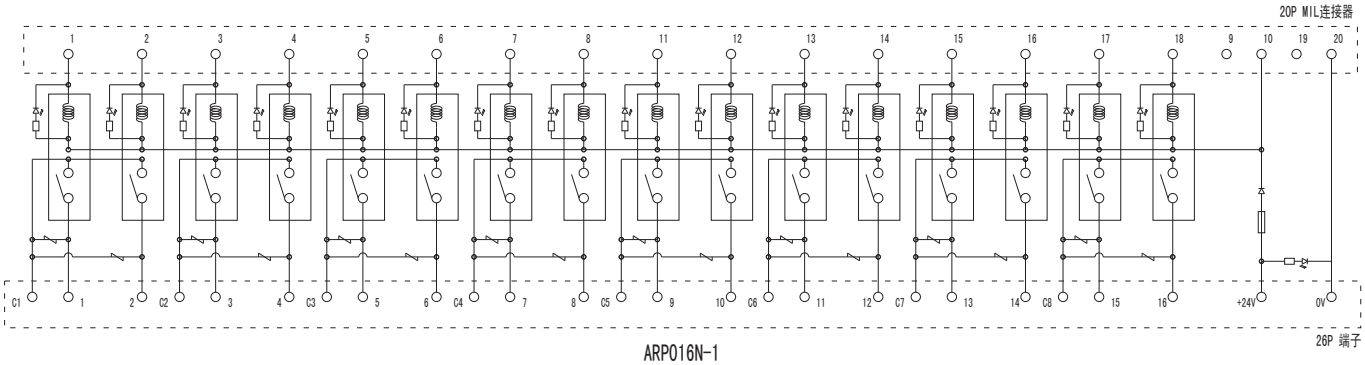

ARP016N-1

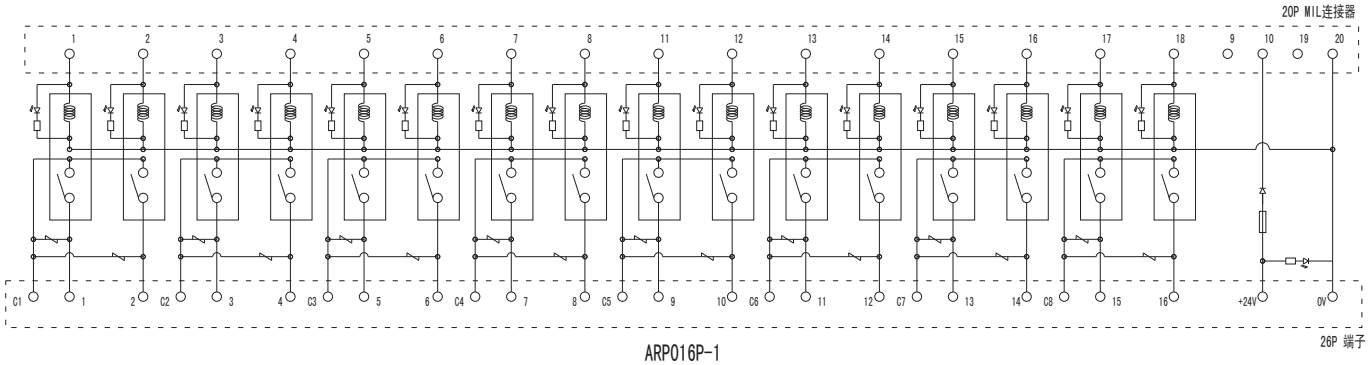

ARP016P-1

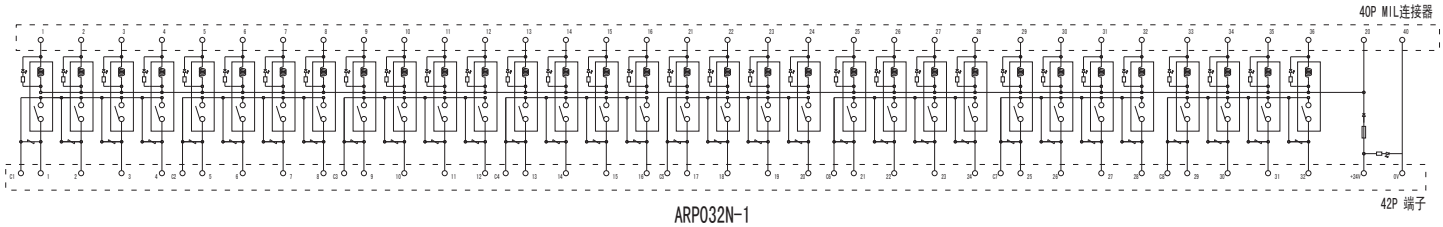

ARP032N-1

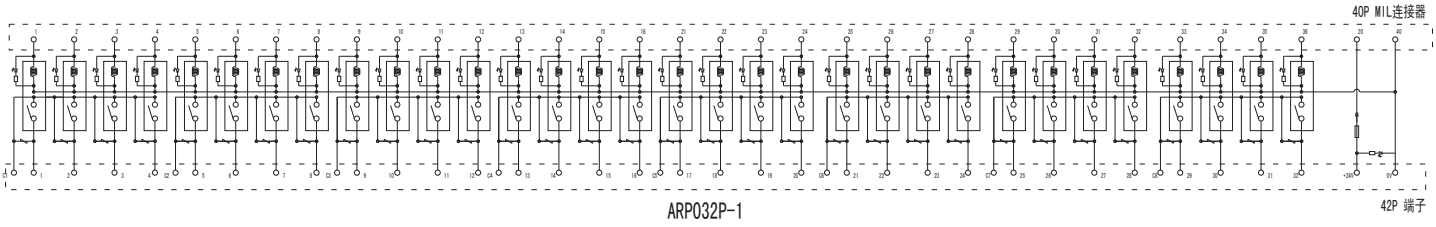

ARP032P-1